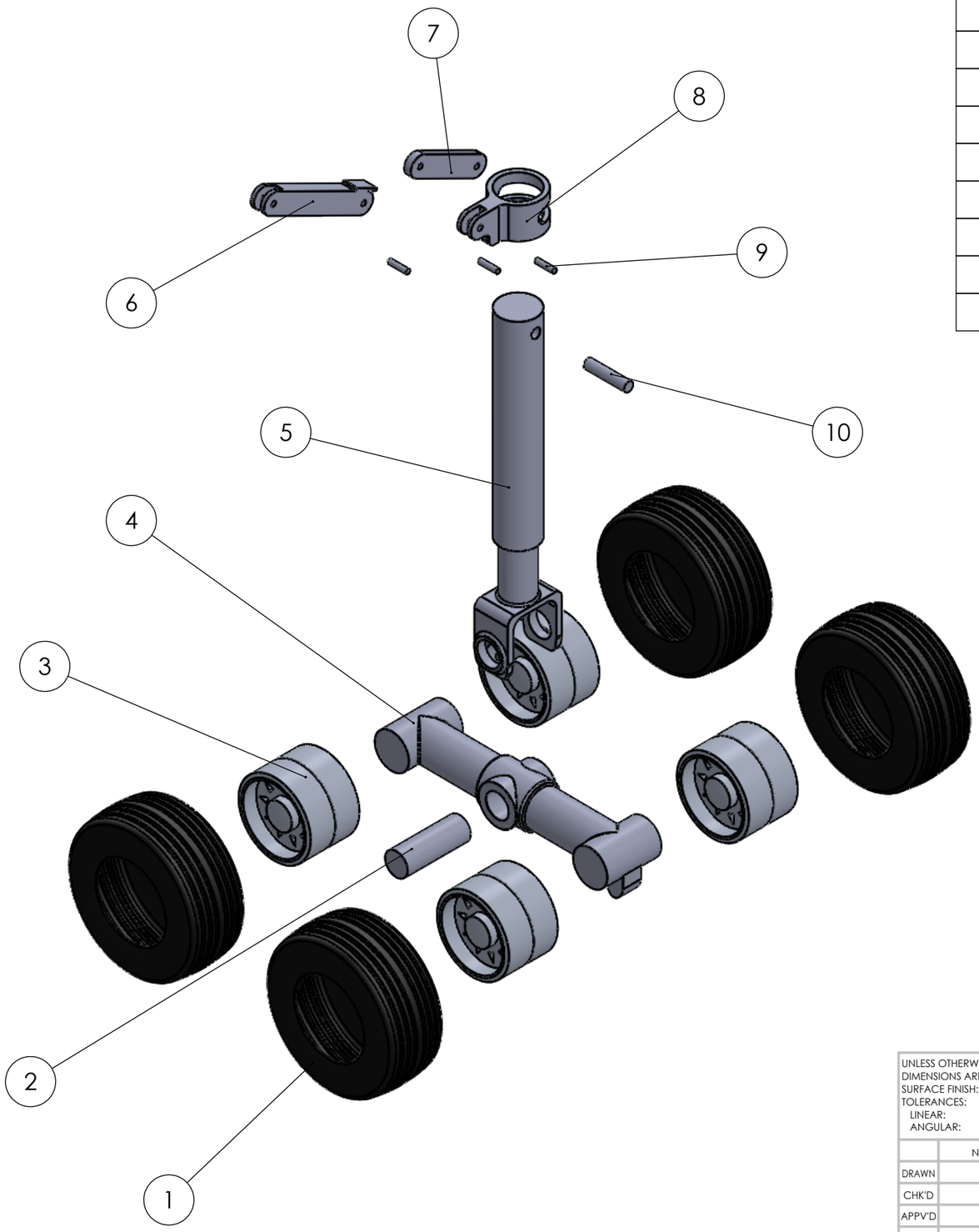

ITEM NO.	PART	Material	QTY.
1	Tire	Rubber	4
2	250mm Pin	AISI 4340	1
3	Wheel	AISI 4340	4
4	Bogie	AISI 4340	1
5	Oleo	AISI 4340	1
6	Long Bar	AISI 4340	1
7	Small Bar	AISI 4340	1
8	Clamp	AISI 4340	1
9	50mm Pin	AISI 4340	3
10	100mm Pin	AISI 4340	1

UNLESS OTHERWISE SPECIFIED:
DIMENSIONS ARE IN MILLIMETERS
SURFACE FINISH:
TOLERANCES:
LINEAR:
ANGULAR:

FINISH:

DEBURR AND BREAK SHARP EDGES

DO NOT SCALE DRAWING

REVISION

	NAME	SIGNATURE	DATE
DRAWN			
CHK'D			
APPV'D			
MFG			
Q.A			

TITLE:

MATERIAL:

WEIGHT:

DWG NO.

Landing Gear Exploded View

A3

SCALE:1:100

SHEET 1 OF 1

SOLIDWORKS Educational Product. For Instructional Use Only.